used for: D-SUB FILTER

POS.	A $^{-0.76}$	B $^{-0.25}$	C	Part NO.
9	31.19	16.46	$25.00^{+0.12}_{-0.13}$	242A26740X
15	39.52	24.79	$33.30^{+0.15}_{-0.1}$	242A26750X
37	69.70	54.96	63.50 ± 0.13	242A26770X

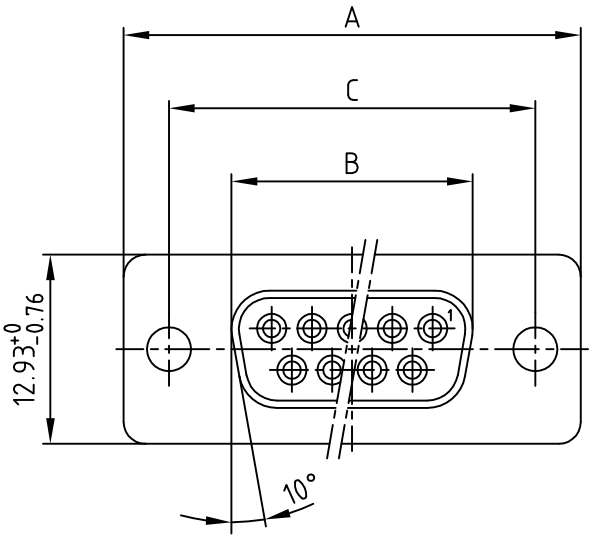

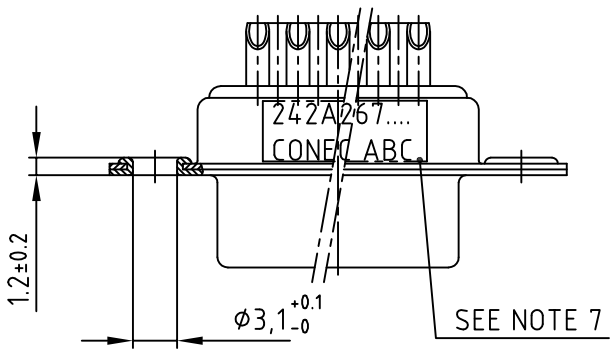

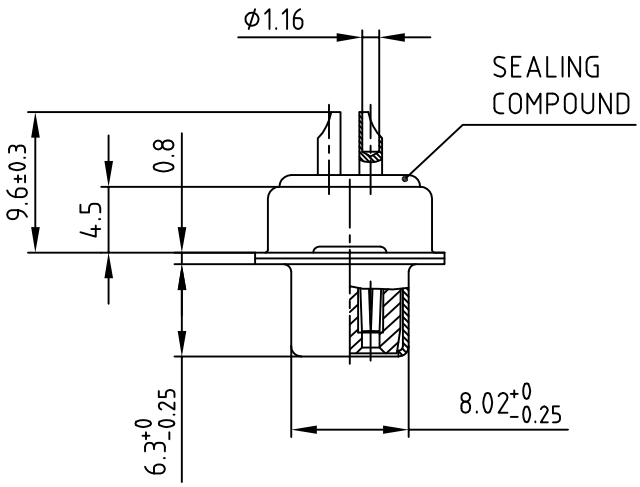

Directive 2002/95/EC „RoHS“ Compliant

APPROVAL # FREIGABE # DEBLOCAGE # AUTOR/ZACION # APPROVAL

CUSTOMER APPROVAL DATE:

NAME: TITLE:

COMPANY NAME:

NOTES:

1. RoHS COMPLIANT
2. METALSHELLS: STEEL; min. 315µin TIN over 40-80µin NICKEL
3. INSULATORS: HIGH TEMPERATURE PLASTIC UL V-0, BLACK
4. CONTACTS: COPPER ALLOY
   PLATING: 8µin HARD GOLD over min. 50µin NICKEL
   SOLDER CUP ACCEPTS CABLE AWG 20
5. CAPACITANCE: 180pF ±20%
6. DIELECTRIC WITHSTANDING VOLTAGE: 424 VDC
7. CONNECTOR IS PART MARKED: PART-NO. CONEC ABC

THIS DRAWING MAY NOT BE COPIED OR REPRODUCED IN ANY WAY, AND MAY NOT BE PASSED ON TO A THIRD PARTY WITHOUT WRITTEN PERMISSION. OWNERSHIP AND COPYRIGHT OF CONEC GmbH

DO NOT ALTER CAD DRAWING BY HAND

rev.	description	date	name
a	Origin		

tolerance

	date	name
2009		
drawn	15.07.	Sonnenberg
appd.	15.07.	Fischer
norm		
d-old		

CONEC®

scale: 2:1

material: SEE NOTES

title: D-SUB FILTER FEMALE
9, 15, 37pos. SOLDER CUP

dwg no: 24K2A671

AutoCAD 2006

DIN-A 4

sh: 1/1

part no: SEE TABLE