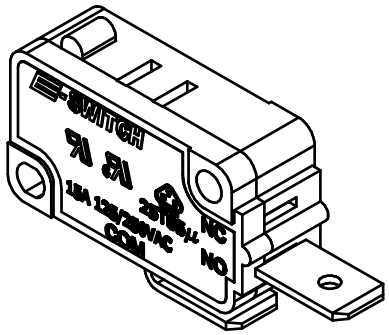

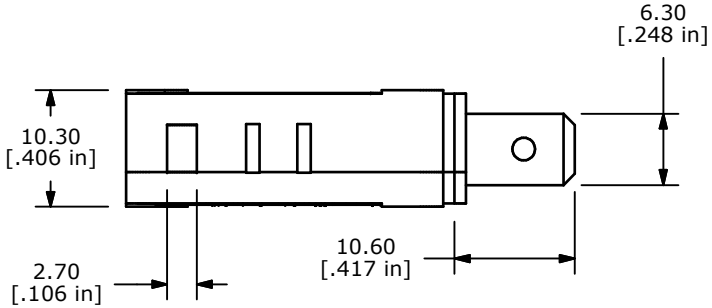

▲ O.P. (MM)	P.T. (MM)
14.7 ± 0.5	2.0 MAX.

O.P. = OPERATING POINT
P.T. = PRE-TRAVEL

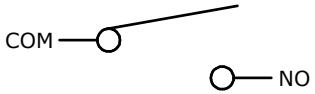

CIRCUIT:SPST

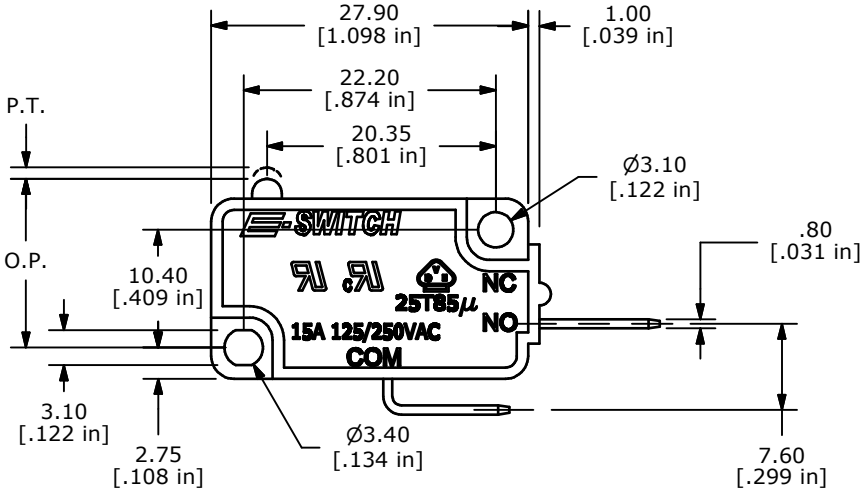

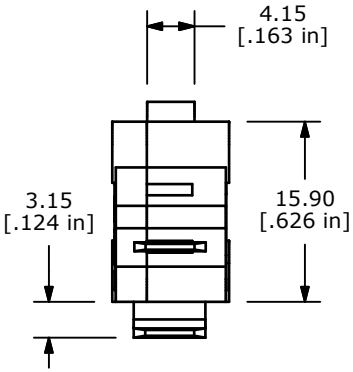

NOTES:
1. ALL DIMENSIONS IN MM [INCH]
2. GENERAL TOLERANCE: X.X=± 0.4
   X.XX=± 0.25
3. RATING: 15A @125/250VAC UL, CUL, VDE APPROVED
4. ▲ OPERATING FORCE: 250 ± 50 GRAMS
5. OPERATING TEMP: -25˚C TO 85˚C
6. ELECTRICAL LIFE: 50,000 CYCLES MIN.
7. MECHANICAL LIFE: 1,000,000 CYCLES TYP.
8. INSULATION RESISTANCE: 100 MEGA-OHMS MIN.
9. DIELECTRIC STRENGTH: 1500VAC 1 MINUTE (INITAL VALUE)
10. CONTACT RESISTANCE: 100 MILLI -OHMS MAX.
11. ▲ DENOTES CRITICAL PARAMETER.
12. 2002/95/EC (ROHS) COMPLIANT

REV	PCR NO	DESCRIPTION	DATE	BY
A	18543	RELEASED FOR PRODUCTION	6/1/09	BLR

THE INFORMATION CONTAINED IN THIS DOCUMENT IS PROPRIETARY
TO E-SWITCH AND IS NOT TO BE COPIED OR TRANSFERRED

E-SWITCH® | LAMB INDUSTRIES

TITLE LS0851500F250C2C

SCALE	DATE	DR	DWG	REV
1.5:1	6/1/2009	BLR	Q950071	A