PART NUMBER	ITEM ① BODY	ITEM ② CONTACT	ITEM ③ INSULATOR	ITEM ④ MCX INTERFACE SPRING
134-1018-031	BRASS GOLD PL .00001 MIN OVER NICKEL PL .00005 MIN OVER COPPER PL .00005 MIN	BERYLLIUM COPPER GOLD PL .00005 MIN OVER NICKEL PL .00005 MIN OVER COPPER PL .00005 MIN	TEFLON	BERYLLIUM COPPER GOLD PL .00003 MIN OVER NICKEL PL .00005 MIN OVER COPPER PL .00005 MIN

DRAWING NO.
C - 134-1018-031/040

0	REVISIONS		
ENGINEERING RELEASE			
1	9-22-98	R H ☒ I ☒ R ☒ P ☒	11-11-98 ECN 45843

CHANGED: 1.0/8.0 LBS MIN/MAX DISENGAGE WAS 5 LBS TYPICAL

* REVISION NUMBER FOLLOWED BY AN ALPHA CHARACTER INDICATES DRAWING CLARIFICATION OR PART NUMBER ADDITION ONLY. *

1a	10-24-00	R H ☒ I A ☒ N J ☒	ECN 47375

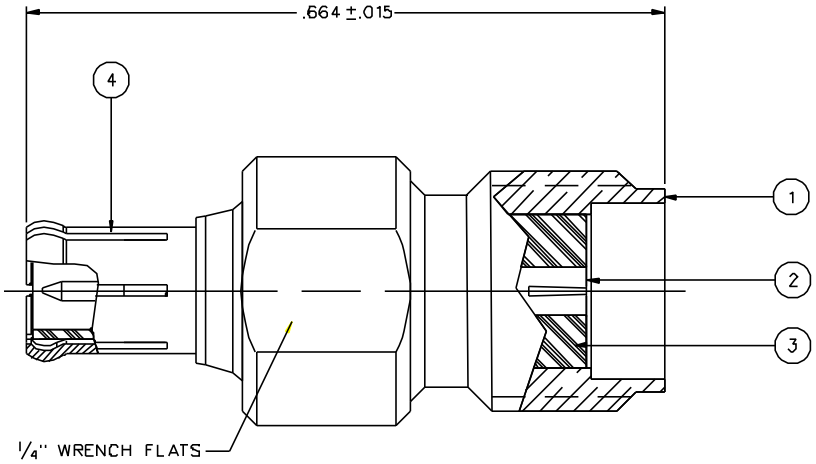

NOTES:

1. SPECIFICATIONS:

IMPEDANCE: 50 OHMS
FREQUENCY RANGE: 0-6 GHz
VSWR: 1.03+.03F MAX (F IN GHz)
WORKING VOLTAGE: 335 VRMS MAX AT SEA LEVEL
DIELECTRIC WITHSTANDING VOLTAGE: 1000 VRMS MIN AT SEA LEVEL
INSULATION RESISTANCE: 10000 MEGOHM MIN
CONTACT RESISTANCE:
CENTER CONTACT - INITIAL 5 MILLIOHM MAX, AFTER ENVIRONMENTAL 8 MILLIOHM MAX
OUTER CONDUCTOR - GOLD PLATED INITIAL 1 MILLIOHM MAX, AFTER ENVIRONMENTAL 1.5 MILLIOHM MAX

BRAID TO BODY - NOT APPLICABLE
CORONA LEVEL: 250 VOLTS MINIMUM AT 70,000 FEET
INSERTION LOSS: .1 dB MAX AT 1 GHz
RF LEAKAGE: -50 dB AT 2.5 GHz
RF HIGH POTENTIAL WITHSTANDING VOLTAGE: 700 VRMS AT 4 AND 7 MHZ

MECHANICAL:

ENGAGE/DISENGAGE FORCE (MCX): 5.6 LBS MAX ENGAGEMENT
1.0/8.0 LBS MIN/MAX DISENGAGEMENT
ENGAGE/DISENGAGE TORQUE (SMA): 2 IN LBS MAX
MATING TORQUE (SMA): 7-10 IN LBS MAX
CONTACT RETENTION FORCE: 6 LBS MIN
CONTACT RETENTION TORQUE: NOT APPLICABLE
COUPLING NUT RETENTION (SMA): NOT APPLICABLE
CABLE ACCEPTABILITY: NOT APPLICABLE
CABLE HEX CRIMP SIZE: NOT APPLICABLE
CABLE RETENTION: NOT APPLICABLE
DURABILITY: 500 CYCLES MIN

ENVIRONMENTAL:

(MEETS OR EXCEEDS THE APPLICABLE PARAGRAPH OF MIL-C-39012)
THERMAL SHOCK: MIL-STD-202, METHOD 107, CONDITION F
OPERATING TEMPERATURE: -55 DEG C TO 165 DEG C
CORROSION: MIL-STD-202, METHOD 101, CONDITION B
SHOCK: MIL-STD-202, METHOD 213, CONDITION B
VIBRATION: MIL-STD-202, METHOD 204, CONDITION B
MOISTURE: MIL-STD-202, METHOD 106

CUSTOMER DRAWING

THIS DRAWING TO BE INTERPRETED PER ANSI Y 14.5M - 1982

"μSTATION"

COMPANY CONFIDENTIAL

TOLERANCE UNLESS OTHERWISE SPECIFIED		DRAWN BY T.A.KARI	DATE 7-24-98	JOHNSON a cinch connectivity solutions brand	Cinch Connectivity Solutions 299 Johnson Ave. Ste. 100 Waseca, MN 56093 1-800-247-8256
DECIMALS .XX	mm	CHECKED BY	DATE	TITLE ASSEMBLY, ADAPTER SMA JACK TO MCX PLUG, BETWEEN SERIES	
.XXX REF		APPROVED BY TAK	DATE 9-22-98		
MATL		APPROVED BY RJB	DATE 10-7-98	CODE NO.	DRAWING NO. C - 134-1018-031/040
FINISH		RELEASE DATE 11-11-98		SCALE 10:1	U/M INCH SHEET 2 OF 2