Apr.1.2017 Copyright 2017 HIROSE ELECTRIC CO., LTD. All Rights Reserved.

COUNT	DESCRIPTION OF REVISIONS	BY	CHKD	DATE	COUNT	DESCRIPTION OF REVISIONS	BY	CHKD	DATE

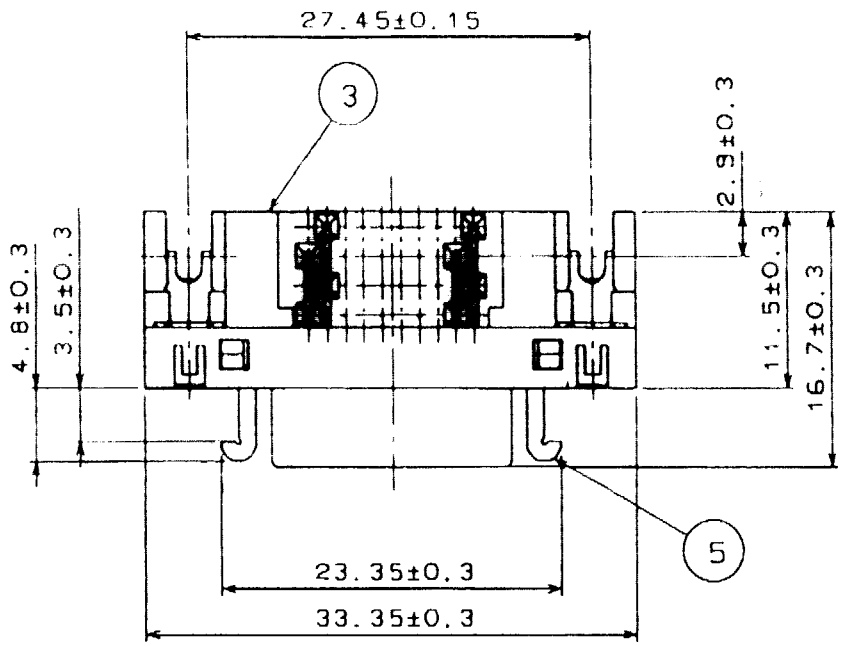

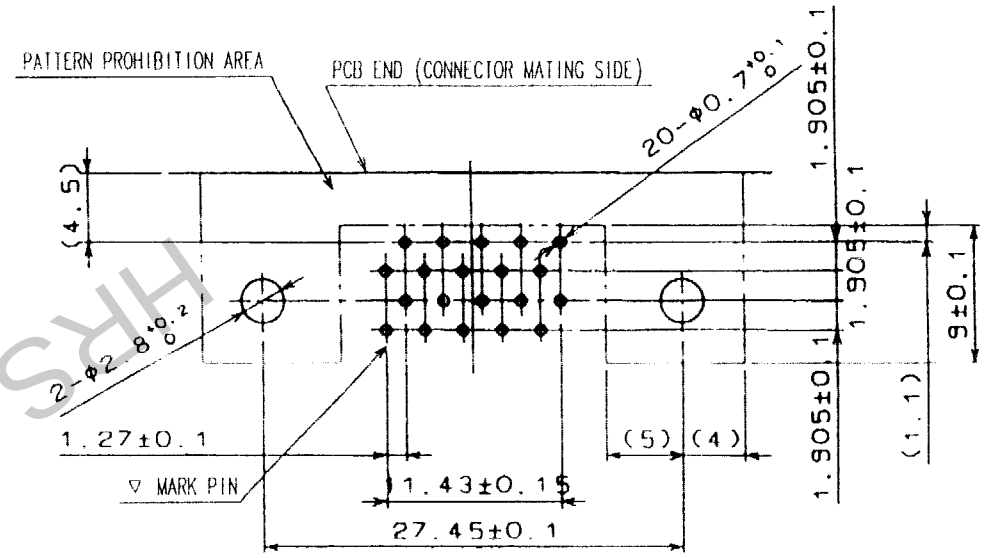

RECOMMENDED PC BOARD PATTERN

(RECOMMENDED BOARD THICKNESS 1.6mm)

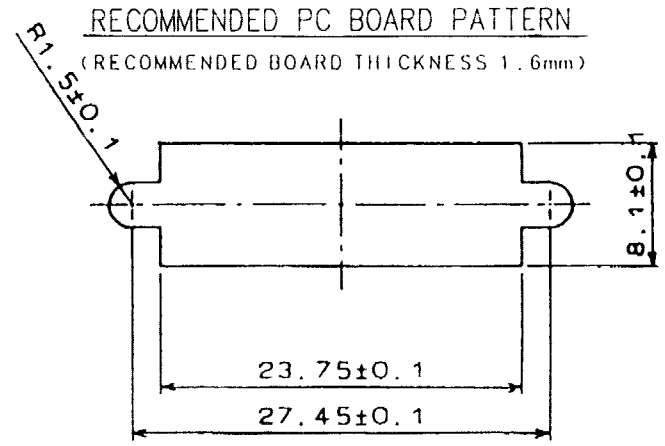

PANEL CUTOUT

(PANEL THICKNESS TO BE 1.6 mm MAX)

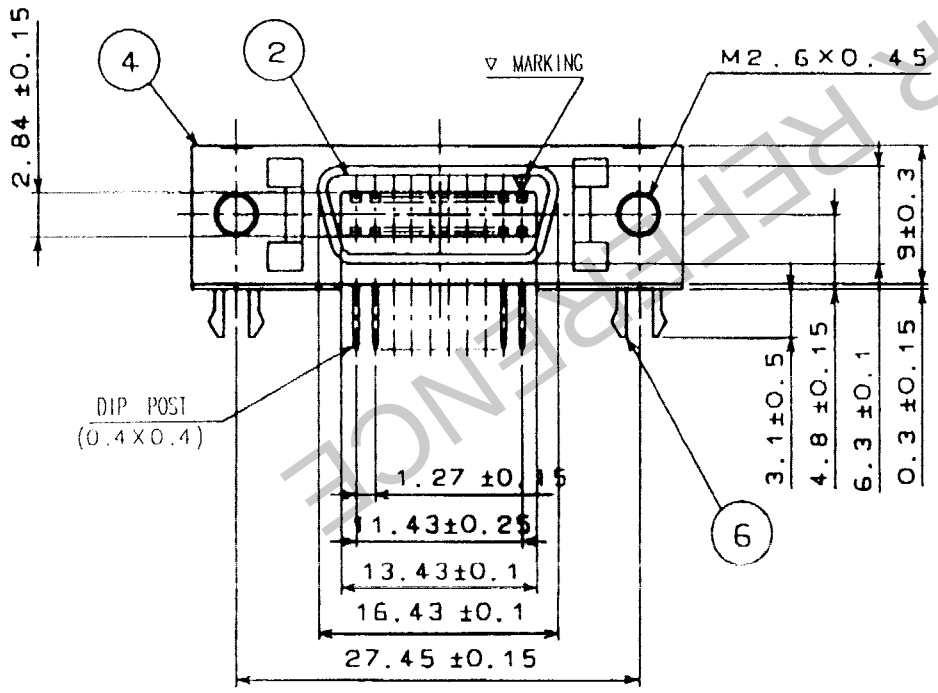

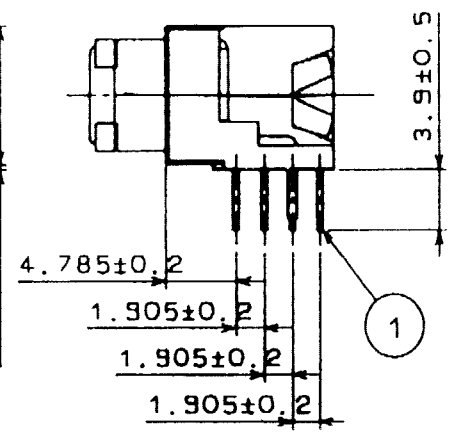

HRS DRAWING FOR REFERENCE

NO.	MATERIAL	FINISH, REMARKS	NO.	MATERIAL	FINISH, REMARKS
3	PBT	(BLACK) UL94V-0	6	PHOSPHOR BRONZE	TIN PLATING
2	PBT	(BLACK) UL94V-0	5	PHOSPHOR BRONZE	NICKEL PLATING
1	PHOSPHOR BRONZE	SELECTIVE GOLD PLATING 0.2μm	4	STEEL	NICKEL PLATING

CODE NO.(OLD)	DRAWN	DESIGNED	CHECKED	APPROVED	RELEASED
	03.10.10	03.10.10	Y. Enami 03.10.15	H. Miura 03.10.15	. .

SCALE 2 : 1

UNITS mm

DRAWING NO. EDC3-045353-01

HRS HIROSE ELECTRIC CO., LTD

PART NO. DX10GM-20SE(50)

CODE NO. CL230-5130-1-50

1/1

TO
Q

FORM NO.229