THIS DRAWING IS UNPUBLISHED. RELEASED FOR PUBLICATION - ,- .
© COPYRIGHT - By - ALL RIGHTS RESERVED.

| LOC | DIST |
|---|---|
| CM | 0 |

REVISIONS

| P | LTR | DESCRIPTION | DATE | DWN | APVD |
|---|---|---|---|---|---|
| | G | REVISED PER ECO-12-016930 | 050CT12 | KH | SM |

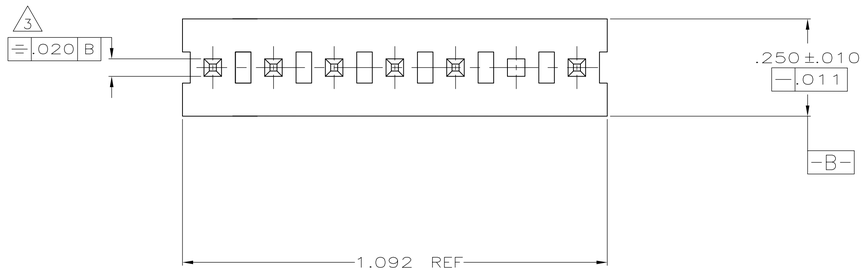


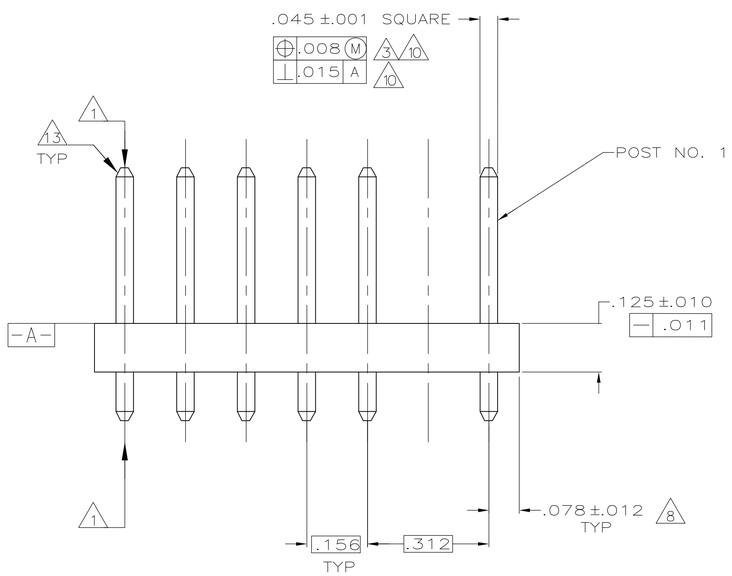


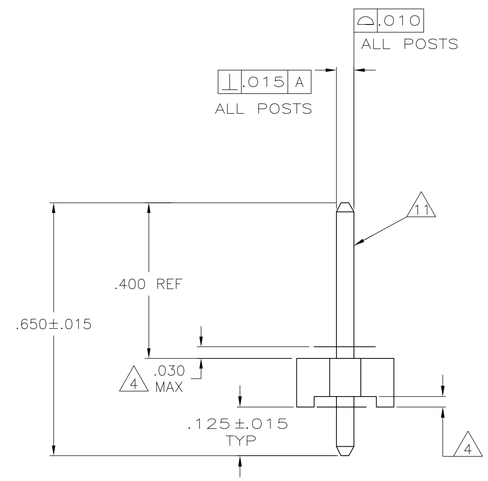


1. POST TO WITHSTAND 13 NEWTONS (3LBS.) MIN. AXIAL FORCE IN BOTH DIRECTIONS SHOWN WITHOUT DISLODGING.
2. TOLERANCES APPLY TO SOLDER SIDE OF BOARD.
3. MEASURED AT SURFACE -A-
4. PLASTIC FLASH PERMITTED IN THIS AREA.
5. PARTS COMPLY WITH AMP SOLDERABILITY SPEC. NO. 109-11-2.
6. ONE HOLE MAY BE UNDERSIZED (.065/.060 DIA.) FOR ASSEMBLY RETENTION DURING WAVE SOLDERING.
7. MATERIAL: HEADER-THERMOPLASTIC POLYESTER GLASS-FILLED 94V-0(NATURAL) POST-COPPER ALLOY (TIN PLATED)
8. COORDINATE DIMENSION APPLIES FROM CENTER OF ACTUAL FEATURE.
9. PLASTIC BURRS CAUSED BY CUT-OFF TOOLING ARE PERMITTED WITHIN THE MAXIMUM TOLERANCE ENVELOPE.
10. POST TO BE MEASURED WHEN STRIP IS HELD FLAT.
11. POST MUST WITHSTAND TWO 90° BENDS AGAINST EXTRUSION WITHOUT BREAKING.
12. DIMENSION SHOULD BE .140 MIN WHEN MATING WITH A MTA-156 CONNECTOR ASSEMBLY OR A SL-156 CONNECTOR ASSEMBLY.
13. PIN BURR OF .005 MAX. VERTICAL AND .003 MAX. HORIZONTAL PERMITTED AT POST TIPS ON BOTH ENDS.

641991-1 SHOWN

| POST NUMBER OMITTED | PART NUMBER |
|---|---|
| 1, 4, & 6 | 641991-5 |
| 4 & 6 | 641991-4 |
| 2 & 5 | 641991-3 |
| 5 | 641991-2 |
| 2 | 641991-1 |

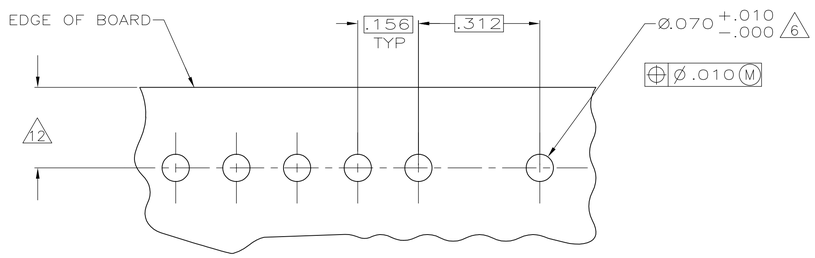


RECOMMENDED MOUNTING HOLE PATTERN FOR .063 THICK P.C. BOARD 2

| IN | MM | IN | MM |
|---|---|---|---|
| .045 | 1.14 | 1.092 | 27.74 |
| .031 | 0.79 | .700 | 17.78 |
| .030 | 0.76 | .450 | 11.43 |
| .020 | 0.51 | .312 | 7.92 |
| .015 | 0.38 | .250 | 6.35 |
| .012 | 0.30 | .156 | 3.96 |
| .011 | 0.28 | .140 | 3.56 |
| .010 | 0.25 | .125 | 3.18 |
| .008 | 0.20 | .078 | 1.98 |
| .005 | 0.13 | .070 | 1.78 |
| .003 | 0.08 | .065 | 1.65 |
| .001 | 0.03 | .063 | 1.60 |
| .000 | 0.00 | .060 | 1.52 |

CONVERSION TABLE

THIS DRAWING IS A CONTROLLED DOCUMENT.

DIMENSIONS: INCHES

TOLERANCES UNLESS OTHERWISE SPECIFIED:
0 PLC ± -
1 PLC ± -
2 PLC ± -
3 PLC ± .005
4 PLC ± -
ANGLES ± 0°30'

MATERIAL 7 FINISH 7

DWN J. HUFFMAN 4-21-97
CHK R. SWING 4-21-97
APVD C. JONES 4-22-97
PRODUCT SPEC —
APPLICATION SPEC —
WEIGHT —

TE Connectivity

NAME MTA-156 HEADER ASSEMBLY,PLAIN, STRAIGHT, .045 SQ. SQUARE POST TIN PLATED, 7 POSITION, OMITTED POST

SIZE A1 | CAGE CODE 00779 | DRAWING NO C-641991 | RESTRICTED TO —

CUSTOMER DRAWING | SCALE 5:1 | SHEET 1 OF 1 | REV G

4805 (3/11)